Controlling Multiple PE44951 Devices

Application Note 115

Summary

The PE44951 includes highly integrated phase shifters with digitally controlled step attenuators for use across the 4.9 to 7.55 GHz frequency range. Each RF path is independently controlled through the Serial Peripheral Interface (SPI) control interface. The PE44951 is ideal for wireless infrastructure and wireless power transfer (WPT) applications. A beamforming application requires control of multiple PE44951 devices.

Introduction

The PE44951 monolithic phase and amplitude controller implements two RF paths with independent digital phase shift and digital step attenuation. Access to the beamformer and AC phase buffers and attenuator control registers is provided through an SPI slave interface. Because the PE44951 doesn't include address pins in the package, individual CS control and SDO paths on each device are required to control multiple PE44951 devices.

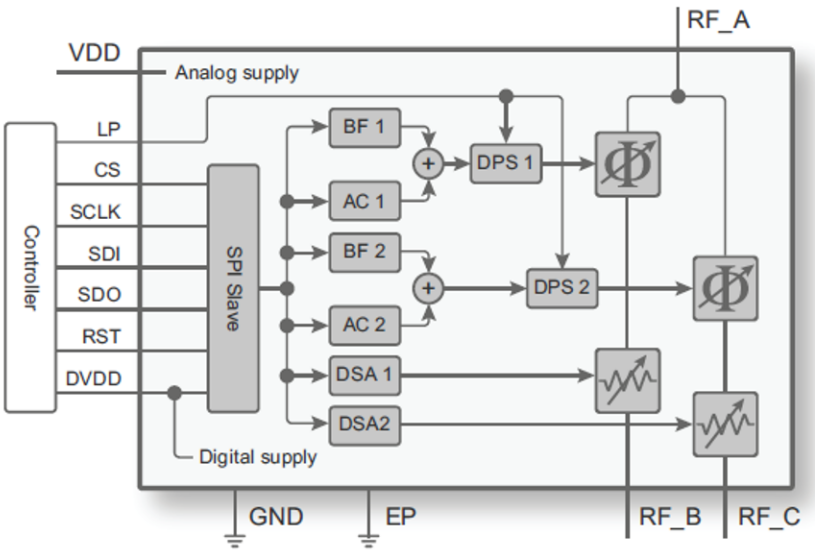

Figure 1. PE44951 functional block diagram

©2026, pSemi Corporation. All rights reserved.
Headquarters: 9369 Carroll Park Dr, San Diego, CA 92121
DOC-135171 — (11/2026)

Group control

To control multiple devices, eight PE44951 devices are selected as one group. Because individual CS and SDO paths between the devices and SPI controller are required, a decoder and multiplexer are needed to control each PE44951 device.

- The lines of the 8-line decoder connect to the CS pin of each PE44951 device.
- The lines of the 8-line multiplexer connect to the SDO pin of each PE44951 device.

The Clock, SDI, LP, and RESET can be tied with each pin of the eight devices through a buffer. To control the decoder and multiplexer for connecting the targeted PE44951, the 3-bit A2–A0 bus is required to connect the three lines of the decoder and multiplexer. With this one group control, eight PE44951 devices (16 channels) can be controlled individually.

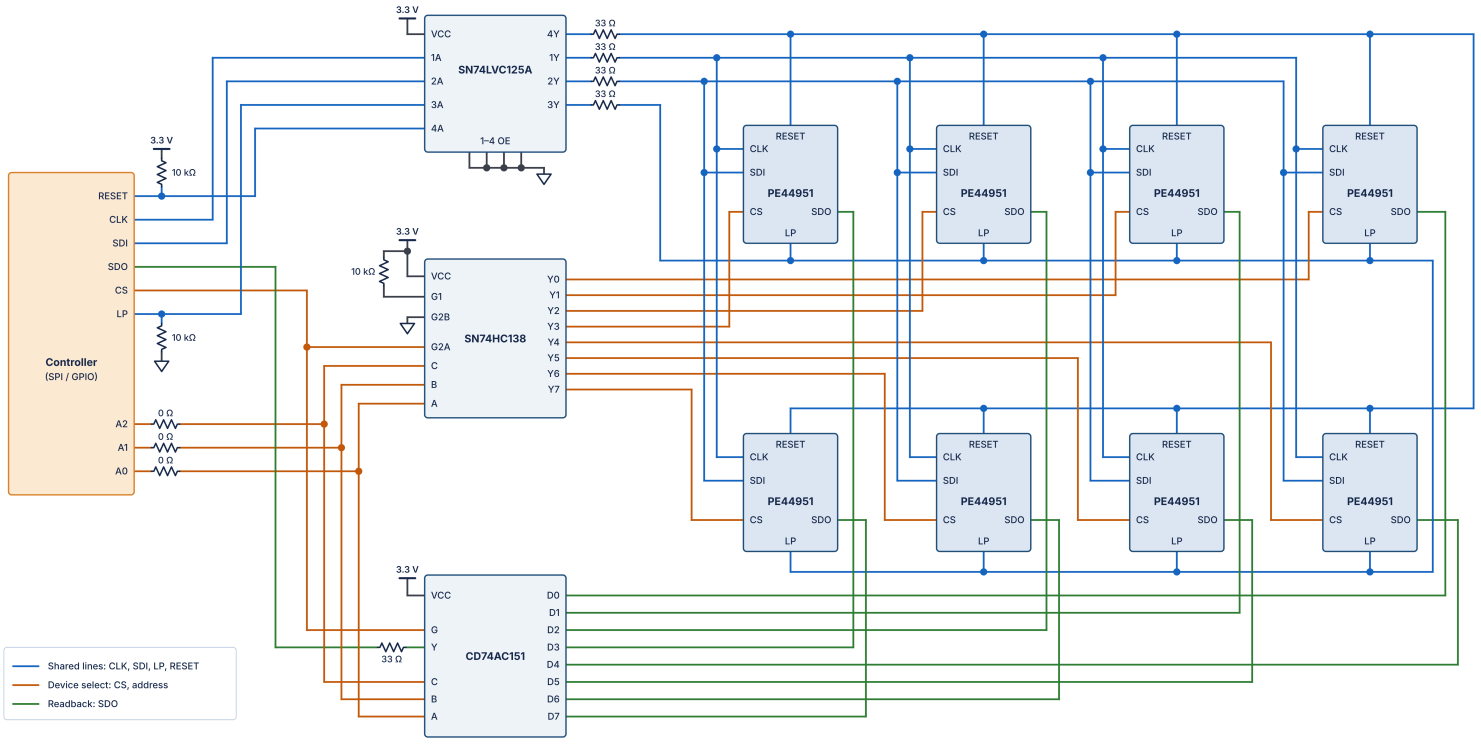

Figure 2. One SPI control group controlling eight PE44951 devices

Control sequence

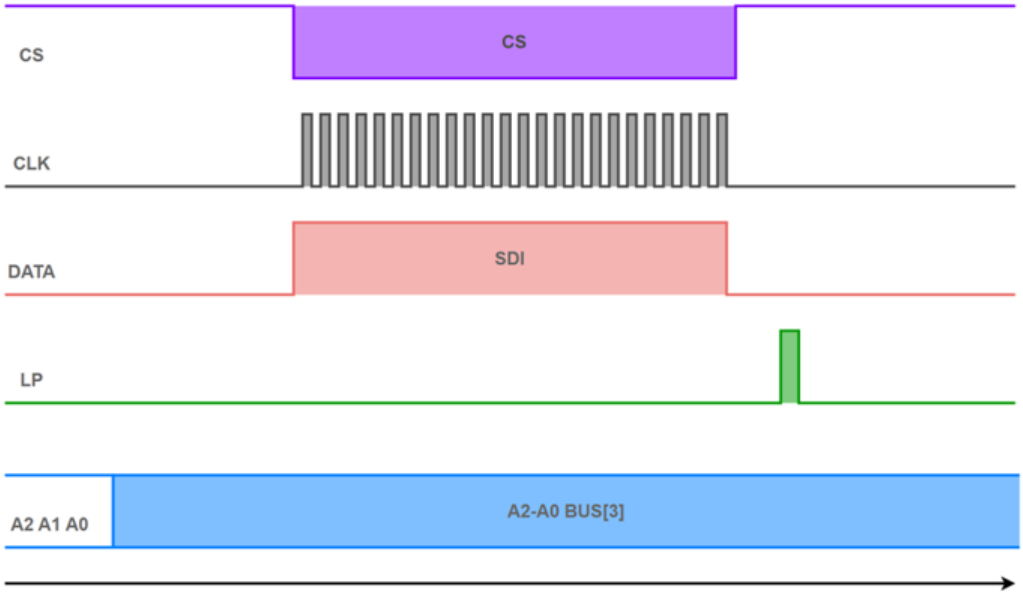

Figure 3. SPI and 3-bit bus control sequence

Note: Before starting the SPI, first configure the 3-bit A2–A0 bus condition. The targeted PE44951 must be ready with the CS and SDO path selection.

Expanded group control

With one group control, eight PE44951 devices (16 channels) can be controlled with 3-bit bus selection. To expand multiple PE44951 device control numbers, use multiple group controls. For example, Figure 4 shows a control group for 64 PE44951 devices (128 channels). This configuration uses eight control groups, and the required external decoder and the multiplexer control each PE44951 using targeted group control. The 3-bit A5–A3 bus selects the targeted group control among eight groups through the decoder and multiplexer. The 3-bit A5–A3 bus makes a path for the decoder and multiplexer in the targeted group, and the 3-bit A2–A0 bus enables the targeted PE44951 ready for SPI. The Clock, SDI, LP, RESET, and 3-bit A2–A0 bus are distributed to eight groups through the buffer. In total, a 6-bit bus is required to control 64 PE44951 devices (128 channels) individually.

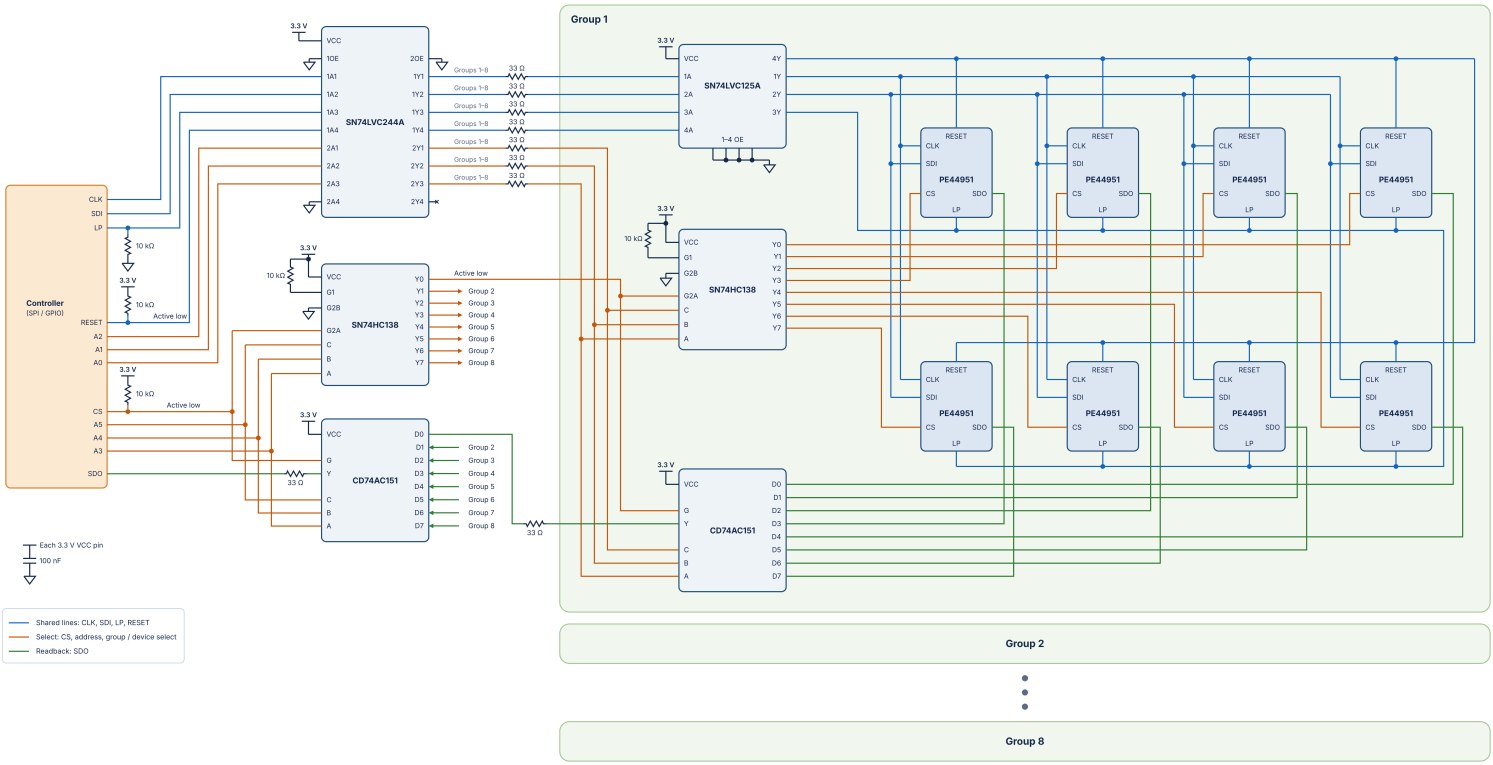

Figure 4. Expanded SPI control group consisting of eight groups (64 PE44951 devices total)

Implementation with one group control

One group control PCB was built, and the control verification was implemented using the pSemi USB dongle and the control tool.

SPI control group implementation

In total, the 8-bit signals (Clock, SDI, SDO, CS, LP, A2, A1, and A0) are controlled by the pSemi USB dongle. The USB dongle offers a 3.3V power supply and an SPI/bus interface, and the tactile switch was used to reset the eight devices (active low). The 3-bit A2–A0 bus is connected to each three lines of the decoder and multiplexer. Because the 3-bit bus is connected to the decoder and multiplexer, each 8-line must be wired to each CS and SDO pin on the same PE44951 with the logic table of the decoder and multiplexer. For example, if the 3-bit bus is '000', the CS and SDO pin paths must be activated on the target ('000') PE44951 device.

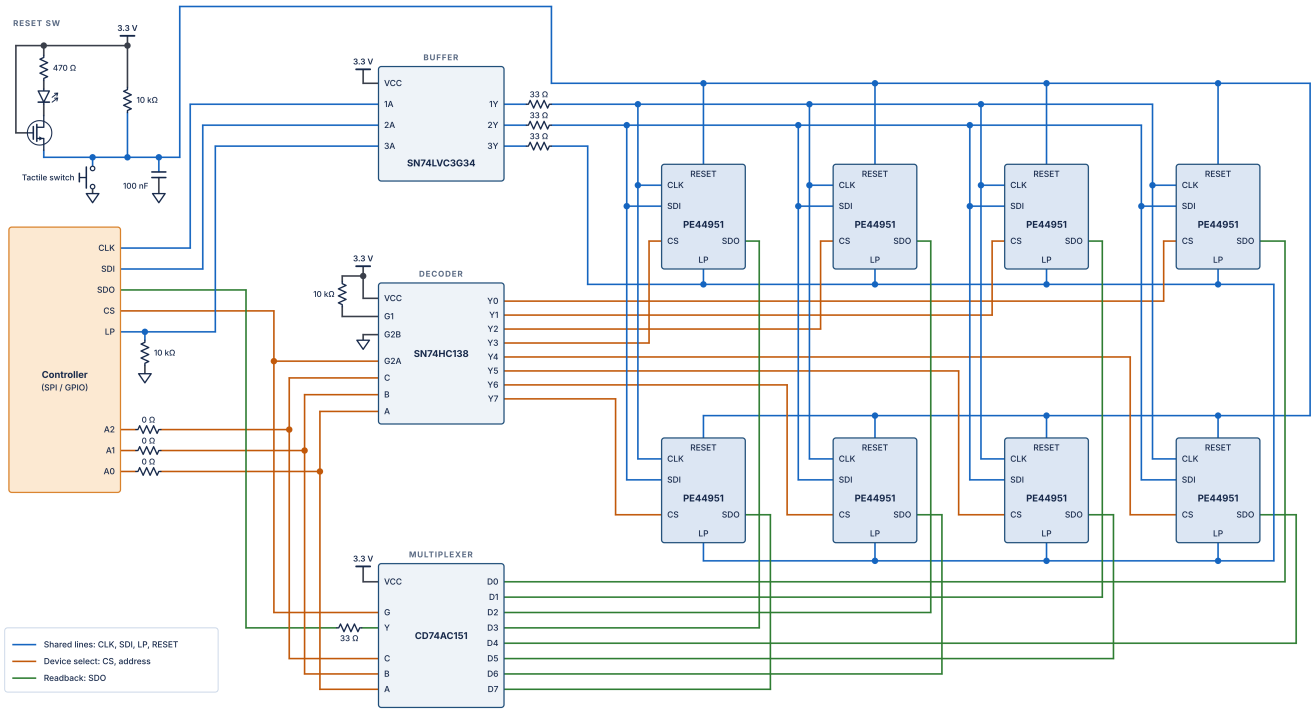

Figure 5. SPI control group implementation with eight PE44951 devices in the control group

PCB

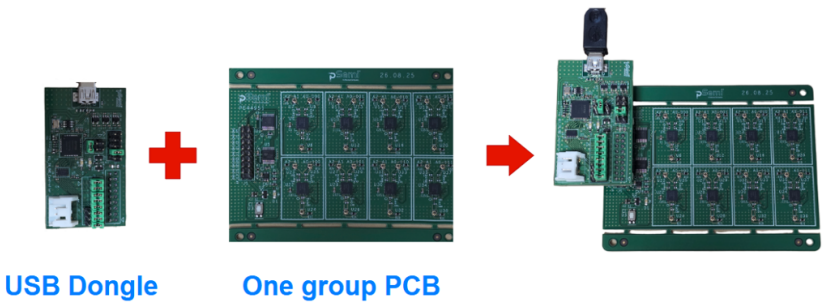

Figure 6. One group PCB with the pSemi USB dongle connected

Device search and device control

Using the control sequence plot in Figure 7, eight PE44951 devices can be searched, and the individual device control (writing/reading) can be done properly.

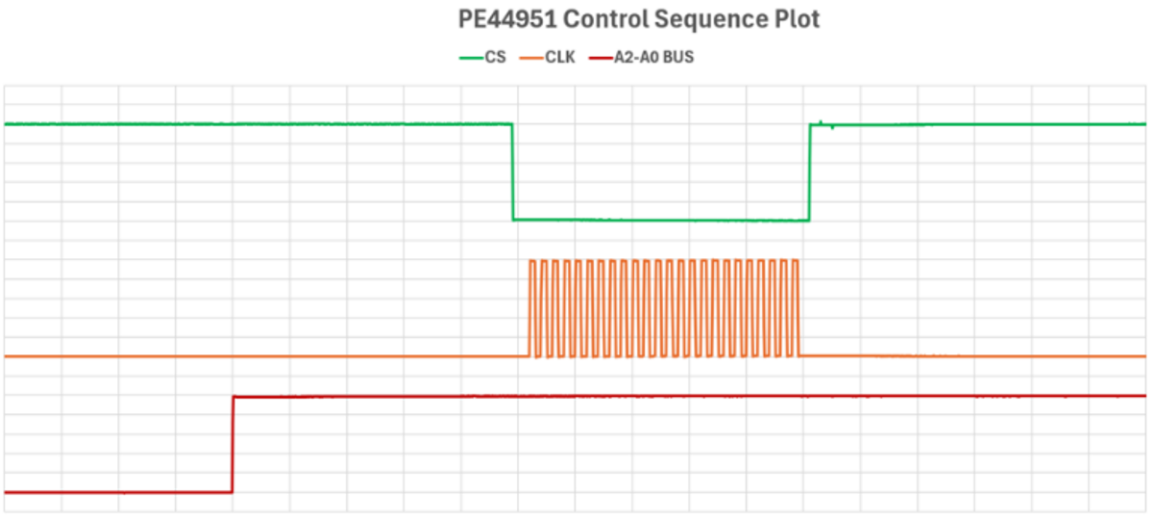

Figure 7. Control sequence plot

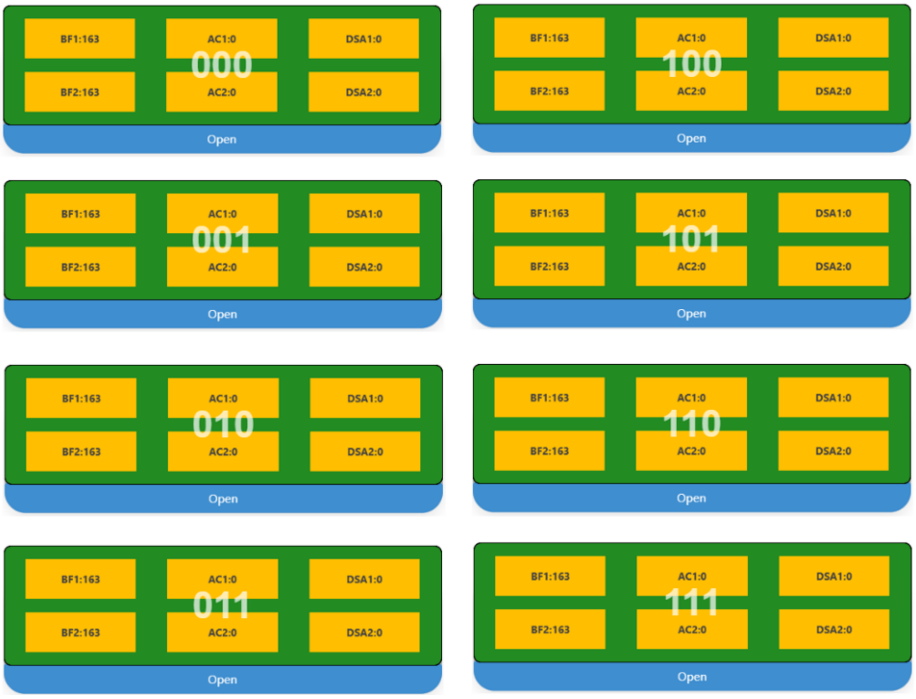

Figure 8. Eight PE44951 devices searched within the interface in one group PCB

Conclusion

To control multiple PE44951 devices, group them with an external decoder, multiplexer, and buffer on the address bus. For example, you can control eight PE44951 devices with a 3-bit bus per group. You can expand the device count by adding group controls and buses, and a 6-bit address bus can control up to 64 PE44951 devices (128 channels).

Copyright, patents, and trademark

© 2026, pSemi Corporation. All rights reserved. “pSemi”, “”, “pSemi”, and “pSemi Corporation” are registered trademarks and service marks of pSemi Corporation for the products and services for which they have been registered in the United States and foreign countries. “UltraCMOS”, “Peregrine”, and “” are registered trademarks of pSemi Corporation for the semiconductor products for which they have been registered in the United States and foreign countries. “HaRP”, “DuNE”, and “ULTRACMOS” are trademarks of pSemi Corporation for the products on or with which they are used. All other trademarks and service marks are the property of their respective owners. U.S. Patents applicable to products of pSemi Corporation include the U.S. Patents identified at http://patents.psemi.com. The websites https://www.psemi.com and https://patents.psemi.com, as well as documents and materials published by pSemi Corporation, are protected by copyright, with reservation of all applicable rights.

Disclaimers

The information in this application note is believed to be reliable. However, pSemi assumes no liability for the use of this information. Use shall be entirely at the user’s own risk. No patent rights or licenses to any circuits described in this application note are implied or granted to any third party. pSemi’s products are not designed or intended for use in devices or systems intended for surgical implant, or in other applications intended to support or sustain life, or in any application in which the failure of the pSemi product could create a situation in which personal injury or death might occur. pSemi assumes no liability for damages, including consequential or incidental damages, arising out of the use of its products in such applications.

Sales contact

For more information, contact Sales at sales@psemi.com.